Filter Schedule

Quantity	Size	Model	Eff.	P. Drop

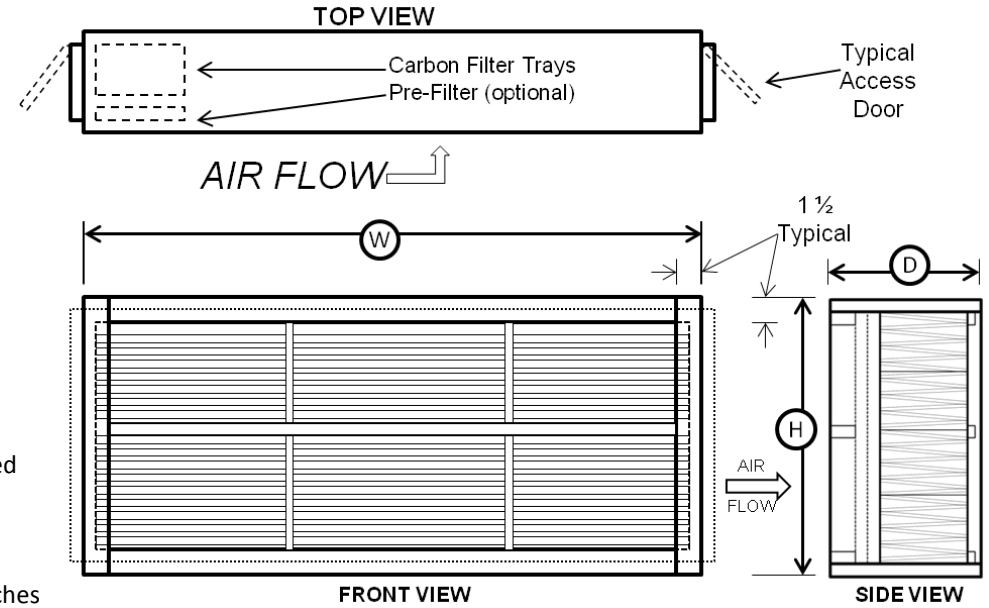

Options:

- ☐ Stainless Steel Body
- ☐ Insulated
- ☐ Aluminum Body
- ☐ 200__-AF Gauge
- ☐ Painted
- ☐ Other_____
- ☐ Other_____

Notes:

1. Housings are factory assembled and manufactured from 16 gauge welded galvanized steel.
2. Filter tracks can be: __2" OR __4"
3. Housing Weight: _____ lbs. (less filter)
4. Housing Depth: __30" (without Pre-Filter) __35 ½" (with Pre-Filter) Other: _____Inches
5. Carbon Panels **(23 3/8)X(23 3/8)X(5/8)** {12 each per 24x24}

TAG:

Carbon Absorber Housing Code

Width Code (# of filters)	1	1 ½	2	2 ½	3	3 ½	4	4 ½	5	5 ½	6	6 ½	7	
Width Inches (W)	23 3/8	34 ¾	46 ¾	58 1/8	70 1/8	81 ½	93 ½	104 7/8	116 7/8	128 3/8	140 ¼	151 5/8	163 5/8	

Height Code	Height Inches (H)														
½	15														
1	27														
1 ½	39														
2	51														
2 ½	63														
3	75														
3 ½	87														
4	99														

Side Access Housing

SUBMITTAL

Model "CA"

APPLIED AIR FILTERS

Project:

HVAC Mech: